Institute of Computer Science
Department of Mathematics and Computer Science

Freie Universität Berlin

Algorithms and Programming IV

From Concurrent to Parallel Programming

Summer Term 2021 | 07.06.2021

Barry Linnert

From Concurrent to Parallel Programming

- Coming from sequential programming the path from program in high level programming language to the execution on the current machine was evaluated and the requirements the program has to fulfilled outlined
- From the different requirements we focused on correctness and performance. Often these two requirements are in conflict to each other.
- To evaluate solutions to optimize the performance while still be able to ensure the program is executed correctly, we uses models.
- Models are useful at every step from developing the program to investigate the execution on a specific machine.

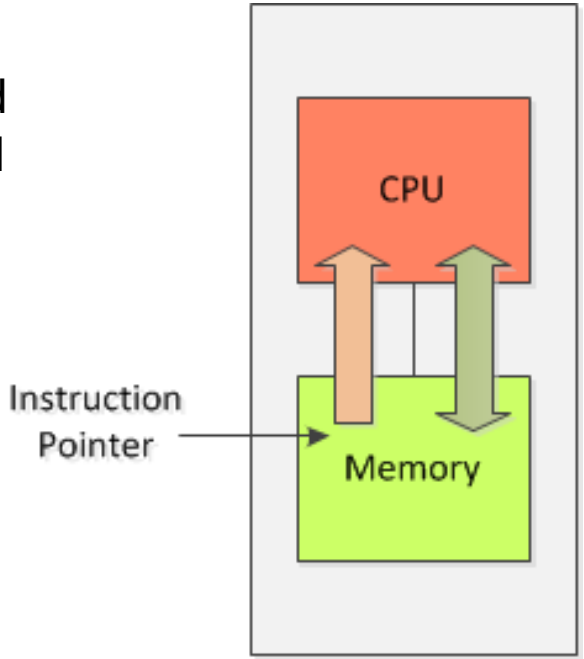

From Concurrent to Parallel Programming II

- While the aspect of performance focuses on the efficient usage of all resources of the machine, the corresponding machine and execution model was extended.
- To support the usage of all of the resources the concurrent execution of more than on program was introduced.
- In order to deal with the correctness of the execution of the program the concept of determinism or determined execution was introduced to support the programming model.

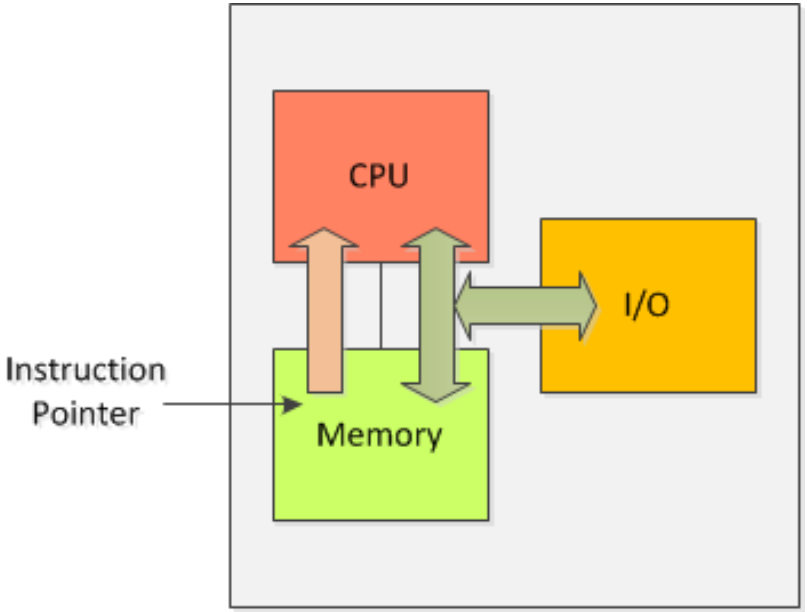

From Concurrent to Parallel Programming III

- When it comes to performance different aspects or perspectives can be distinct: the user and the service provider's perspective.
- With the introduction of separated address spaces encapsulate the program execution in processes, the concurrent execution of different programs using different resources (CPU vs. IO) is possible while executing the program in an deterministic way.
- The concurrent execution of processes mainly supports the service provider's perspective of performance.

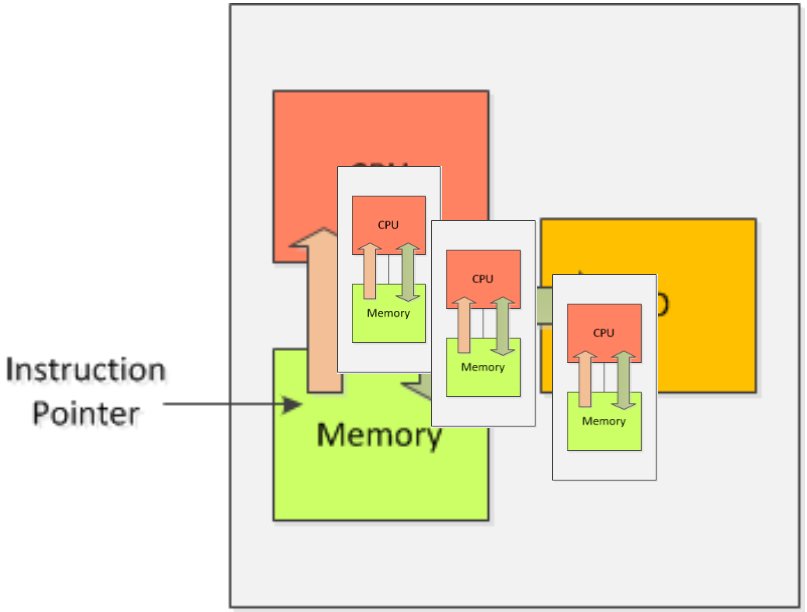

From Concurrent to Parallel Programming IV

- The user's perspective of performance was supported with the introduction of threads executing different parts of the program concurrently (or in parallel on different resources) while working together using shared memory to exchange data.
- Unfortunately, the usage of shared data with shared variables comes with some challenges to a correct execution – critical sections.
- To protect critical sections some approaches were discussed. In the end the support of the machine architecture and operating system was used to introduce a reliable protection.

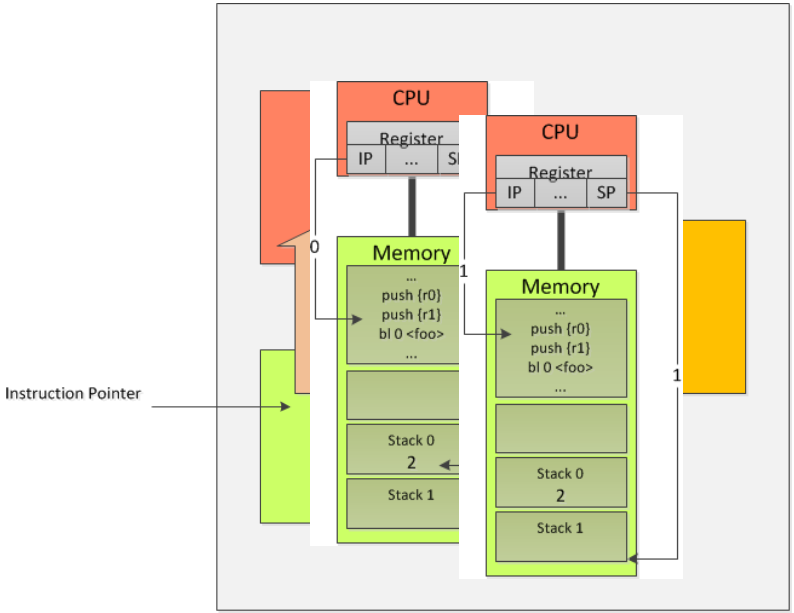

From Concurrent to Parallel Programming V

- The modeling of the program execution in order to identify critical sections and therefore ensuring the determined execution can be a challenging task. To support the modeling on a higher level of understanding the approach of Petri nets was introduced.
- Additionally, the discussion of different approaches to protect the critical sections of a program illustrated the difference between our machine and execution model and the real hardware, so the machine and execution model was extended once again.

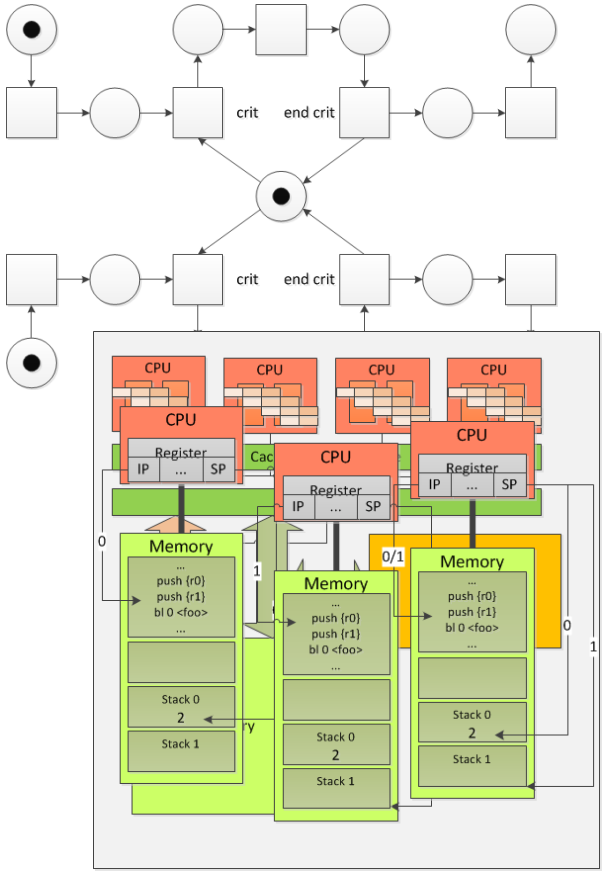

From Concurrent to Parallel Programming VI

- Using the introduced mechanisms to protect the critical section lead to further challenges we have to deal with: the appearance of the access to the critical section as a resource as itself.
- Thus, programs introducing more than one critical section may face the possibility of running into a deadlock.
- To deal with the problem of deadlocks different approaches were discussed.

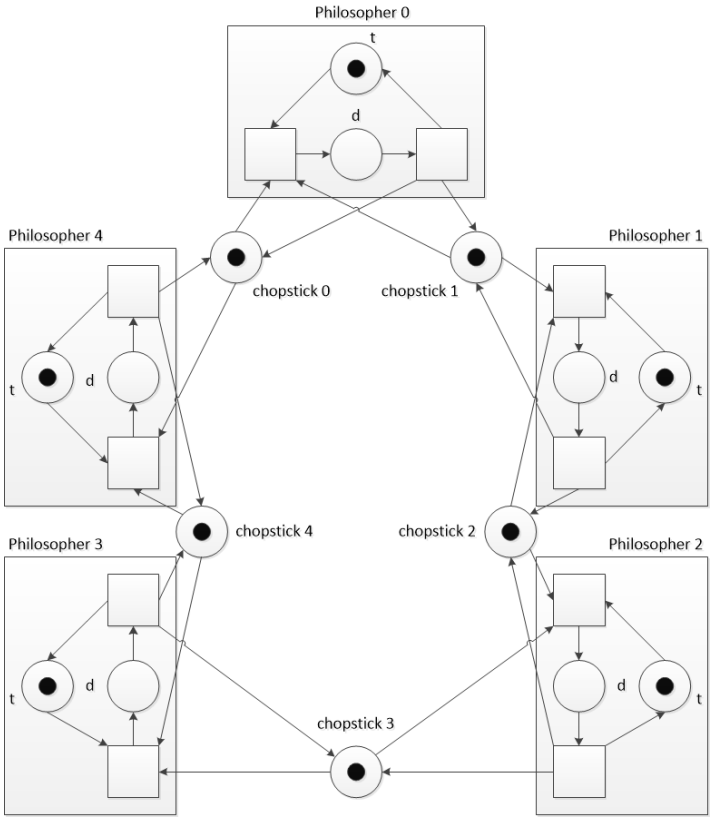

From Concurrent to Parallel Programming VII

- Based on the discussion of the design of concurrent programs and the extensions of the machine and execution model the program model was extended too.
- To use all of the resources of the machine in order to optimize the performance of the program from the user‘s perspective we introduced the parallel programming.
- Different approaches to develop programs running in parallel – with or without the usage of shared memory – were introduced.
- Until now the focus was on the optimization of our program, that was under our control completely.

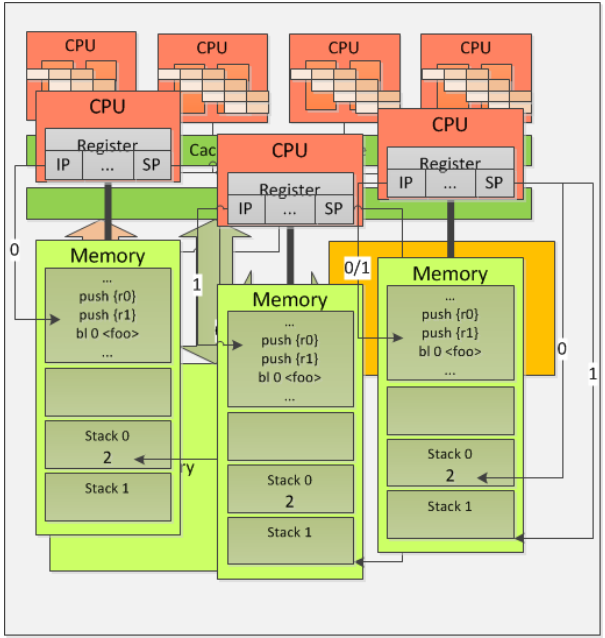

Institute of Computer Science
Department of Mathematics and Computer Science

Freie Universität Berlin

Algorithms and Programming IV

Introducing to the Concepts of Distributed Programming

Summer Term 2021 | 07.06.2021

Barry Linnert